BOWSERS®
FIRE PROTECTION EXPERTS
SINCE 1968

The Importance of Fire & Smoke Dampers





CREDIT: iStock / AlbertPego



bowsers.com.au

Why Fire & Smoke Dampers are Critical



Fire Compartmentation in Buildings

Larger buildings such as offices and apartment complexes are constructed as multiple compartments. These compartments are designed to restrict the spread of fire and smoke throughout the entire building.

In many apartment complexes, each unit forms its own fire compartment with the walls, floors and ceilings being constructed from fire-rated materials to form barriers and contain any fire or smoke.

Wherever openings in these barriers are required, suitable fire rated treatments must be installed and maintained. For example, apartment entry doors may need to be fire-rated and fitted with smoke seals.

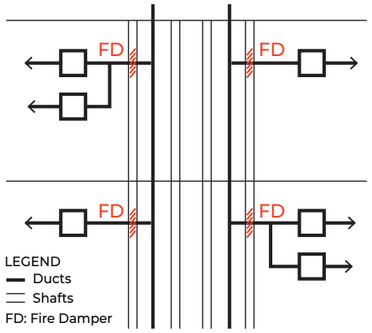

DAMPER PLACEMENT IN BUILDINGS

Services like air conditioning, plumbing, and electrical systems often pass through these compartments. Each penetration must be sealed with a compliant passive fire protection system to preserve the integrity of the fire barrier.

This brochure focuses specifically on the role of passive fire protection in maintaining the fire rating of air conditioning ductwork.

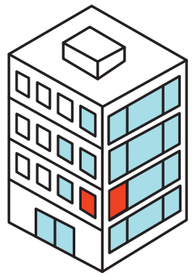

WITH FIRE DAMPERS

Fire dampers enable fire compartments that contain the spread of fire and smoke throughout the entire building.

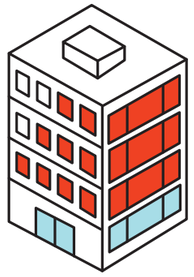

WITHOUT FIRE DAMPERS

With no fire dampers or fire compartments to contain the fire or smoke, the fire spreads throughout the entire building rapidly and dangerously.

What are Fire & Smoke Dampers?

Whenever an air conditioning duct passes through a fire (or smoke) barrier, it must have a device installed at the point of penetration to prevent the passage of fire (or smoke) through the duct from one side to the other. These devices are called fire (or smoke) dampers. They are essentially “gates” within the ductwork that are left open during the normal operation of the air conditioning system. However, upon activation, in the event of a fire, the damper closes to prevent the passage of fire and smoke between compartments.

Like any fire protection measure, these devices should be installed and maintained by specialist passive fire protection contractors. Their initial installation must be certified to comply with the National Construction Code (formerly the Building Code of Australia) and various Australian Standards. This certification is vital as it forms part of the documentation required to enable the building to be occupied.

The installation of the fire / smoke dampers requires co-ordination between the contractors installing the ductwork and the ones building the barrier. The penetration through which the ductwork passes, must be constructed in a very specific manner. The damper must be correctly affixed within that penetration. Then the ductwork must be correctly connected to the damper using a special “breakaway joint”. This joint is a special connection that permits the ductwork to collapse in the event of a fire, without pulling the fire damper out of the penetration. If the damper is pulled out of the penetration, the barrier is compromised, causing the fire to spread.

Once the fire damper is correctly installed, access must be provided to enable it to be routinely inspected and serviced. Typically, an access panel is installed within the ductwork to enable this.

Fire and smoke dampers must be serviced to ensure their correct operation in the event of a fire. In Australia, the current standard prescribing the maintenance procedure is **AS 1851-2012 Routine service of fire protection systems and equipment**. The maintenance procedure assesses the installation of the fire damper, ensures there is suitable access to maintain it and confirms that it has not been damaged or deteriorated to a point where it cannot function.

As a minimum, 20% of a building's fire (and smoke) dampers must be inspected annually so that over the course of 5 years, they have all been assessed. It is vital this annual maintenance inspection be conducted by an experienced contractor able to interpret all the requirements of the National Construction Code, Australian Standards and product manufacturer’s guidelines. There are many different types and configurations of fire (and smoke) dampers installed throughout buildings and experienced auditors have the knowledge to ensure a thorough and correct assessment of them is completed.

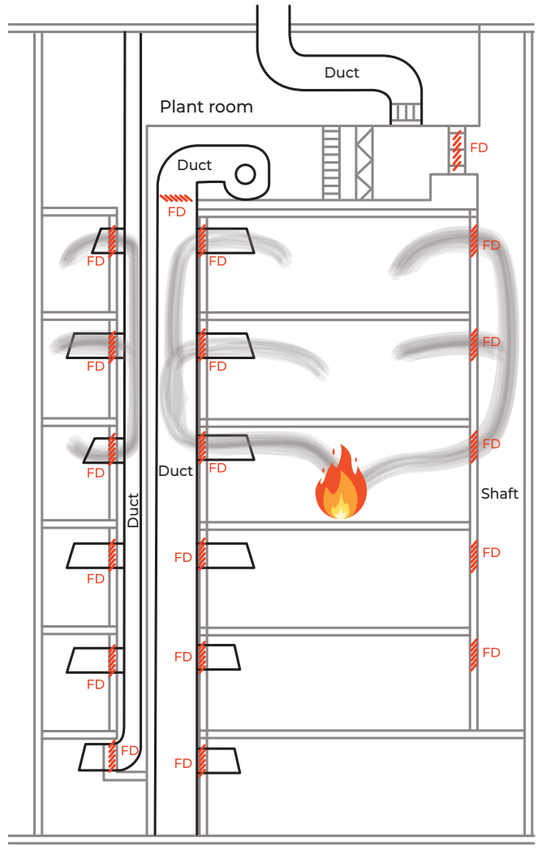

POTENTIAL SMOKE LEAKAGE THROUGH A BUILDING WITHOUT PROTECTION

When Fire Dampers are installed correctly and closed, the fire and smoke won’t leak through.



Why use Bowsers?

- Bowsers has been working as a passive fire rating contractor for over 50 years and specifically assessing fire dampers since the 1990s. Our experienced teams of auditors and technicians can complete all annual maintenance inspections and repairs to ensure your fire and smoke dampers are fully compliant.
- We can complete any repairs necessary, including repairs or replacement of dampers, rectification of penetrations in fire barriers, and installation of suitable maintenance access.
- Upon completion of our repairs we will provide certification of all works.
- Bowsers is accredited with the Fire Protection Association Accreditation Scheme (FPAS) and the Queensland Building and Construction Commission (QBCC) and is an accredited applicator of a range of approved products to the relevant Australian Standards.
- Bowsers is independently risk accredited by Greencap Cm3.
- Bowsers is an accredited applicator for a range of fire rated products used in the industry.



Bowsers' Service Offering

Bowsers' service offering covers every phase of asset delivery and life cycle for various sectors.

Its offering includes:

- Audits
- Compliance Reports
- Rectification of existing passive fire protection systems
- Installation of new passive fire protection systems
- Certification of installed systems
- Technical advice

WE ARE ACCREDITED WITH THE FOLLOWING ORGANISATIONS

CREDIT: iStock / Beyondimages



CREDIT: iStock / Zstockphotos

THE OASIS SHOPPING CENTRE, GOLD COAST

Case Study: The Oasis Shopping Centre, Fire & Smoke Dampers

SECTOR:
Building (Shopping Centre)

CLIENT:
Precise Air Group Pty Ltd

PROJECT COMPLETION:
Late 2024

ADDRESS:
75 Surfers Parade
Broadbeach QLD

PROJECT OVERVIEW:

Bowsers was commissioned to conduct a comprehensive fire damper audit to ensure the effective maintenance of its Passive Fire Protection Services. The inspection revealed minor corrosion in specific areas and identified instances where some fire dampers did not fully comply with regulatory standards.

SERVICES OFFERED:

This comprehensive task involved upgrading over 100 existing dampers with new mechanical and intumescent fire dampers, as well as addressing non-compliant penetrations, and decommissioning dampers connected to obsolete equipment.

Accessing difficult-to-reach fire dampers required scaffolding, scissor lifts, and extended working hours due to height and location challenges. Some dampers were located in tenant-occupied areas, demanding careful scheduling and coordination to minimise disruption.

Bowsers addressed these challenges with detailed pre-planning, enhanced safety protocols, and specialised equipment. Work in sensitive areas—such as restaurants—was scheduled after hours to avoid operational impact.

Thanks to strategic planning, clear communication, and expert execution, the project was delivered on time and within budget. Both the client and shopping centre management praised Bowsers for their tailored solutions, professionalism, and deep expertise in managing complex, high-traffic environments.



SHERATON GRAND MIRAGE, GOLD COAST

Case Study: Sheraton Grand Mirage, Fire & Smoke Dampers

SECTOR:
Building (hotels)

CLIENT:
Airmaster Australia

PROJECT COMPLETION:
Ongoing

VALUE:
$250,000+

ADDRESS:
Main Beach, Gold Coast

PROJECT OVERVIEW:

Following the successful upgrade of fire dampers across 284 rooms, 11 suites, service areas, and resort corridors at the 5-star Sheraton Grand Mirage, Gold Coast, completed over a 26-week period, Bowers has been re-commissioned to provide ongoing inspections and maintenance services.

SERVICES OFFERED:

After completing the initial upgrade, Bowers has continued to deliver periodic inspections and essential maintenance. These services ensure the continued compliance and optimal functionality of the fire damper systems.

Given that the resort maintains occupancy rates exceeding 80%, meticulous planning is required to ensure that maintenance activities do not disrupt guests or staff.

Bowers implemented a comprehensive planning process and worked in close coordination with the resort's reservation teams to schedule maintenance tasks effectively. Construction activities were conducted during designated hours to minimise noise and disruption, ensuring an uninterrupted experience for guests.

Bowers' technical expertise, effective communication, and ability to operate within live hotel environments have earned the company continued trust for ongoing inspections and maintenance. As a result, the fire damper systems remain fully compliant and continue to perform at their best.



BOWSERS®
FIRE PROTECTION EXPERTS
SINCE 1968

Sydney

Unit 5, 19 McCauley Street
Matraville NSW 2036

T 02 9669 2283
E inspections@bowsers.com.au

South-East Queensland

Unit 4, 18 Blanck Street
Ormeau Qld 4208

T 07 3266 2366
E scallinan@bowsers.com.au

bowsers.com.au

FPA AUSTRALIA GOLD MEMBER Fire Protection Association Australia
FIRE INDUSTRY ALLIANCE
qbcc queensland building and construction commission
cm3 GREENCAP ONLINE REX SOLUTIONS
Master Builders Association MEMBER MASTER BUILDER, BETTER BUILDER
MASTER BUILDERS QUEENSLAND Proud Member
FPAS Fire Protection Accreditation Scheme Recognised Business